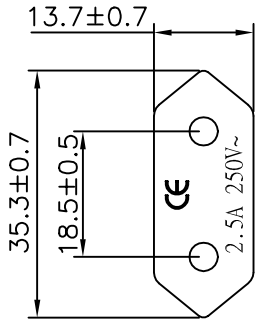

PLUG:COX−08

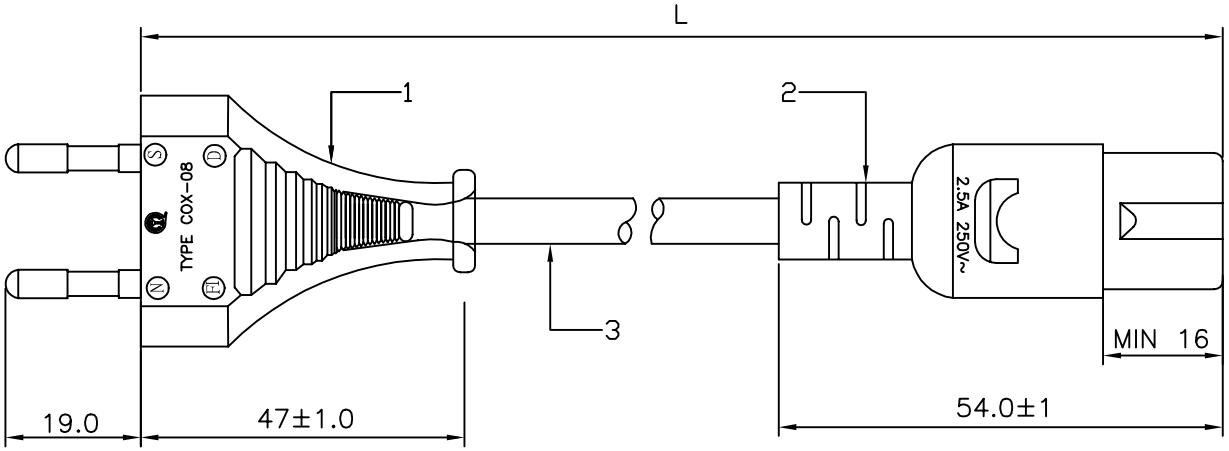

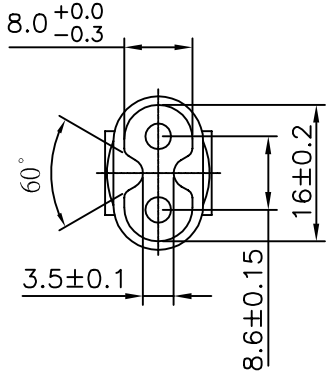

CONNECTOR:COX−09

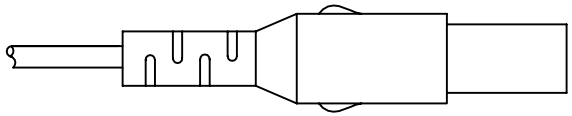

NOTES:

1.PLUG No.: COX−08

MARK:COXOC COX−08 2.5A 250V~

APPROVED:

2.CONNECTOR No.:COX−09

MARK:COXOC COX−09 2.5A 250V~

APPROVED: N16744

3.POWER WIRE:

◁ VDE ▷ H05VVH2-F 2X0.75mm^2 COXOC ÖVE

CEBEC KEMA-KEUR Ⓝ Ⓓ Ⓢ FIEMMEQU.

4.TIE WIRE.

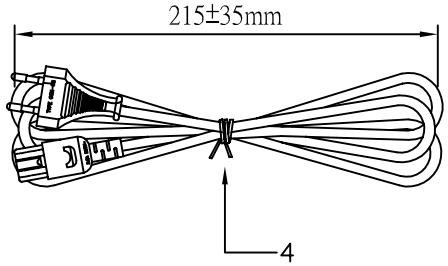

			UNLESS OTHERWISE SPECIFIED TOLERANCE 0. ±1.0 .0 ±0.5 .00 ±0.3		DCS Ltd
			SCALE: AS SHOW	UNIT: mm	
		/ /	DRAWN 李崢	09/24/02	DRAWN NAME: POWER CORD
		/ /	CHECKED	/ /	
A		09/24/02	APPROVED	/ /	PRODUCT NO. CLEL8
REV.	DESCRIPTION	DATE/Y2K		SIZE A4 REV. A	FILE NAME: B11-0809XXXACCX